SERVO-CONTROLLED 3-WAY VACUUM SOLENOID VALVES WITH BISTABLE IMPULSE SOLENOID PILOT VALVE AND WITH LOW ABSORPTION ELECTRIC COIL FOR LARGE CAPACITIES

The innovative construction technology of these solenoid valves and their conformation are the same as those previously described. What differentiates them are the bistable impulse pilot valve powered by a low absorption fitted electrical coil which, with a simple electrical impulse, exchanges the shutter positions and keeps them there even in absence of electricity, until it receives a new impulse of opposite polarity. For this reason, they can only be supplied with direct current electric coils. This is the reason why their use is recommended in all those cases requiring maximum connection security at the vacuum source, even in the absence of an electrical power supply.
The electric coil of the pilot valve is fully plastic-coated in synthetic resin, watertight, insulation class F (up to 155 °C) as per standard VDE, with 3 mm two-terminal electrical connections for micro connectors in compliance with EN 175301-803 (ex DIN 43650) – C.
Degree of protection IP 54; IP 65 with connector inserted.
Available for voltages 12 – 24V/CC.
Tolerance permitted on the nominal voltage value: ± 10%.
Maximum electric power: 1W
The connector can be rotated 180° on the coil and can be supplied upon request with LED lights, with anti-interference circuit and/or with protection devices against overvoltage. The push-button device for their manual activation cannot be installed on these solenoid valves.

Technical features

Operating pressure: from 0.5 to 1000 absolute mbar
Servo-control pressure: from 4 to 8 bar
Temperature of suctioned fluid: from – 5 to + 60°C

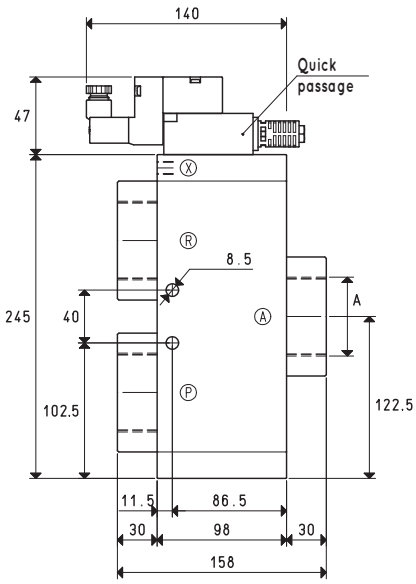

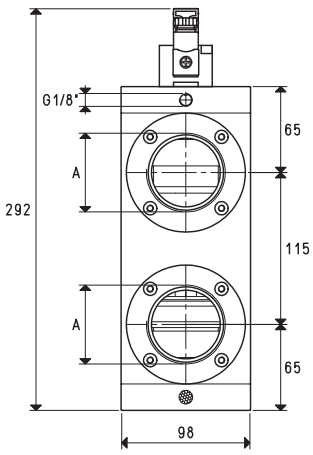

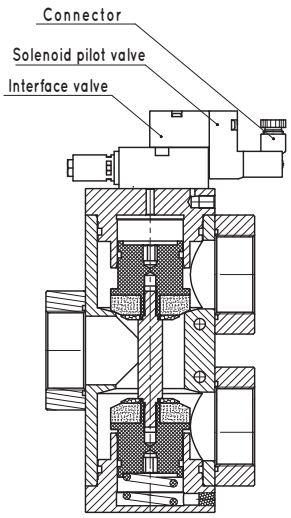

NC

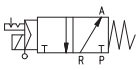

X = Compressed air supply
P = Pump
A = Service
R = Passage

NO

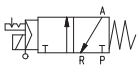

X = Compressed air supply
P = Passage
A = Service
R = Pump

Item	A	Max. capacity	Vacuum level mbar ass		Reaction time msec		Orifice	Passage section	Servo-control pressure	Weight
	Ø	m³/h	min	max	ecc.	disecc.	Ø	mm²	bar (g)	Kg
07 08 53	G2"	390	1000	0.5	78	50	52	2123	4 ÷ 8	5.87

Note: Please specify the electric coil voltage in the order (E.g.: 07 08 53 V24-CC)
The connector is not integral part of the solenoid valve and, therefore, must be ordered separately (See solenoid valve accessories).

Conversion ratio: N (newton) = Kg x 9.81 (G-force) ; inch = $\frac{mm}{25.4}$; pounds = $\frac{g}{453.6} = \frac{Kg}{0.4536}$ GAS-NPT thread adapters available at page 1.130

SERVO-CONTROLLED 3-WAY VACUUM SOLENOID VALVES WITH BISTABLE IMPULSE SOLENOID PILOT VALVE AND WITH LOW ABSORPTION ELECTRIC COIL FOR LARGE CAPACITIES

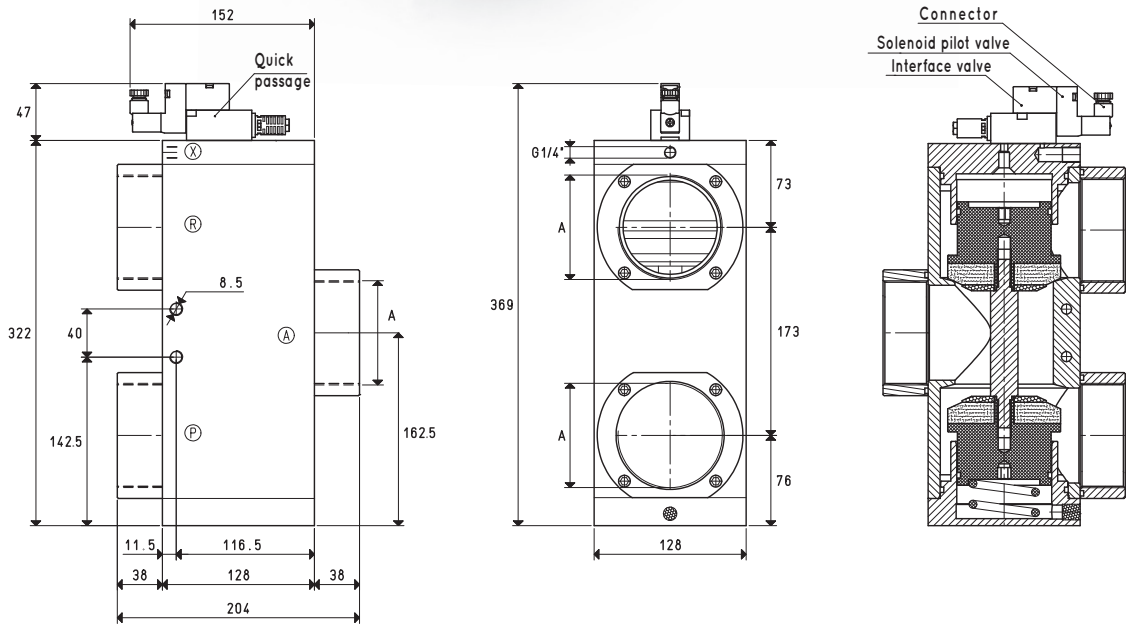

NC

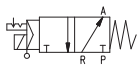

X = Compressed air supply
P = Pump
A = Service
R = Passage

NO

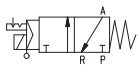

X = Compressed air supply
P = Passage
A = Service
R = Pump

Item	A	Max. capacity	Vacuum level mbar ass		Reaction time msec		Orifice	Passage section	Servo-control pressure	Weight
	Ø	m^3/h	min	max	ecc.	disecc.	Ø	mm^2	bar (g)	Kg
07 09 53	G3"	750	1000	0.5	132	84	80	5024	4 ÷ 8	11.80

Note: Please specify the electric coil voltage in the order (E.g.: 07 09 53 V24-CC)

The connector is not integral part of the solenoid valve and, therefore, must be ordered separately (See solenoid valve accessories).

Conversion ratio: N (newton) = Kg x 9.81 (G-force) ; inch = $\frac{mm}{25.4}$; pounds = $\frac{g}{453.6}$ = $\frac{Kg}{0.4536}$ GAS-NPT thread adapters available at page 1.130